OVENTION®

THE ESSENCE OF COOKING™

Single MiLO™ Oven

Model MiLO-14

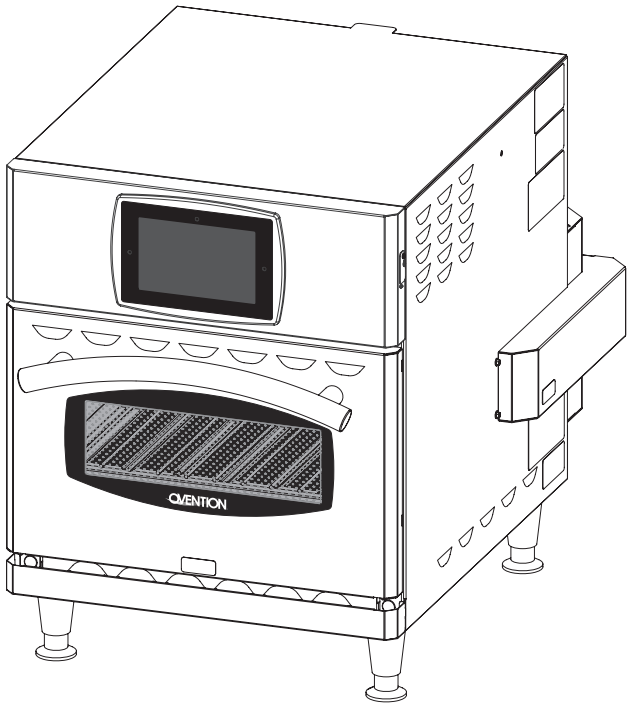

Installation and Operating Manual

⚠ WARNING

Do not operate this equipment unless you have read and understood the contents of this manual! Failure to follow the instructions contained in this manual may result in serious injury or death. This manual contains important safety information concerning the maintenance, use, and operation of this product. If you're unable to understand the contents of this manual, please bring it to the attention of your supervisor. Keep this manual in a safe location for future reference.

⚠ ADVERTENCIA

No opere este equipo al menos que haya leído y comprendido el contenido de este manual! Cualquier falla en el seguimiento de las instrucciones contenidas en este manual puede resultar en un serio lesión o muerte. Este manual contiene importante información sobre seguridad concerniente al mantenimiento, uso y operación de este producto. Si usted no puede entender el contenido de este manual por favor pregunte a su supervisor. Almacenar este manual en una localización segura para la referencia futura.

⚠ AVERTISSEMENT

Ne pas utiliser cet équipement sans avoir lu et compris le contenu de ce manuel ! Le non-respect des instructions contenues dans ce manuel peut entraîner de graves blessures ou la mort. Ce manuel contient des informations importantes concernant l'entretien, l'utilisation et le fonctionnement de ce produit. Si vous ne comprenez pas le contenu de ce manuel, veuillez le signaler à votre supérieur. Conservez ce manuel dans un endroit sûr pour pouvoir vous y référer plus tard.

P/N 07.04.893.00

© 2018 Ovention, Inc.

CONTENTS

Important Owner Information....2
Introduction....2
Important Safety Information....3
Model Description....4
Model Designation....5
Specifications....5
Plug Configurations....5
Electrical Rating Chart....5
Temperature Range....5
Dimensions....6
Installation....7
General....7
Operation....8
General....8
Recipe Information....8
Startup....8
Cooking....9
Standby Shutdown....10
Shutdown....10
Programming Categories/Recipes....10
Editing/Creating Setpoint Temperatures....13
Changing Temperature Unit of Measure....14
Uploading from a USB Drive....14
Maintenance....15
General....15
Daily Cleaning....15
Weekly Cleaning....15
Monthly Cleaning....16
Troubleshooting Guide....18
Options and Accessories....19
Limited Warranty....20

IMPORTANT OWNER INFORMATION

Record the model number, serial number, voltage, and purchase date of the unit in the spaces below (specification label located on the right side of the unit). Please have this information available when calling Ovention® for service assistance.

Model No. _____

Serial No._____

Voltage_____

Date of Purchase_____

Business Hours: 7:00 AM to 5:00 PM Monday–Friday
Central Standard Time (CST)

(Summer Hours: June to September—
7:00 AM to 5:00 PM Monday–Thursday
7:00 AM to 4:00 PM Friday
Central Daylight Time [CDT])

Telephone: 855-298-6836 (Ovention Hotline)

E-mail: partsandservice@oventionovens.com

Additional information can be found by visiting our web site at **www.oventionovens.com**.

INTRODUCTION

Ovention Single MiLO™ ovens set a new standard in cooking quality, speed, flexibility, and efficiency. A new discovery in air handling not only speeds the cooking process, but “scrubs” and recirculates the air through the oven—eliminating the need for a hood system in most installations. Using an icon-driven touchscreen, operators can use, edit, and develop over 4000 custom recipes. Recipes can be developed to include up to three cooking stages—each with varying heat profiles, air velocity settings, timing, and chamber exhaust vent settings.

Ovention Single MiLO ovens are products of extensive research and field testing. The materials used were selected for maximum durability, attractive appearance, and optimum performance. Every unit is inspected and tested thoroughly prior to shipment.

This manual provides the installation, safety, and operating instructions for Ovention Single MiLO ovens. Ovention recommends all installation, operating, and safety instructions appearing in this manual be read prior to installation or operation of the oven.

Safety information that appears in this manual is identified by the following signal word panels:

⚠ WARNING

WARNING indicates a hazardous situation which, if not avoided, could result in death or serious injury.

⚠ CAUTION

CAUTION indicates a hazardous situation which, if not avoided, could result in minor or moderate injury.

NOTICE

NOTICE is used to address practices not related to personal injury.

Read the following important safety information before using this equipment to avoid serious injury or death and to avoid damage to equipment or property.

⚠ WARNING

ELECTRIC SHOCK HAZARD:

- **Plug unit into a properly grounded electrical receptacle of the correct voltage, size, and plug configuration. If plug and receptacle do not match, contact a qualified electrician to determine and install proper voltage and size electrical receptacle.**
- **Unit must be grounded properly. Failure to ground unit properly could result in serious personal injury or death.**
- **Place unit in standby, allow unit to cool, turn off GFCI switch, turn off Control Reset switch, and unplug unit before performing any cleaning, adjustments, or maintenance.**
- **DO NOT submerge or saturate with water. Unit is not waterproof. Do not operate if unit has been submerged or saturated with water.**
- **Unit is not weatherproof. Locate unit indoors where ambient air temperature is a minimum of 70°F (21°C).**
- **Do not steam clean or use excessive water on unit.**
- **This unit is not "jet-proof" construction. Do not use jet-clean spray to clean this unit.**
- **Do not clean unit when it is energized or hot.**
- **Do not clean unit with metal scouring pads. Metal pieces can break off pad and touch electrical components, creating risk of electric shock.**
- **Do not pull unit by power cord.**
- **Keep power cord away from heated surfaces.**
- **Do not allow power cord to hang over edge of counter.**
- **Discontinue use if power cord is frayed or worn.**
- **Do not attempt to repair or replace a damaged power cord. Cord must be replaced by an Authorized Ovention Service Agent or a person with similar qualifications.**
- **This unit must be serviced by qualified personnel only. Service by unqualified personnel may lead to electric shock or burn.**
- **Use only Genuine Ovention Replacement Parts when service is required. Failure to use Genuine Ovention Replacement Parts will void all warranties and may subject operators of the equipment to hazardous electrical voltage, resulting in electrical shock or burn. Genuine Ovention Replacement Parts are specified to operate safely in the environments in which they are used. Some after-market or generic replacement parts do not have the characteristics that will allow them to operate safely in Ovention equipment.**

EXPLOSION HAZARD: Do not store or use gasoline or other flammable vapors or liquids in the vicinity of this or any other appliance.

Install unit in accordance with installation instructions in this manual.

This oven is designed specifically to heat or cook—NOT for industrial or laboratory use.

In the event of emergency, unplug unit.

Unit may be located adjacent to a slippery floor.

⚠ WARNING

FIRE HAZARD:

- **Install with a minimum of 1″ (25 mm) of space from rear of unit to any surface. If safe distances are not maintained, discoloration or combustion could occur.**
- **Install on non-combustible surface if used without legs or casters.**
- **Do not block or cover any cabinet venting.**
- **Do not use an extension cord. If power cord is too short, contact a qualified electrician to determine and install proper voltage and size electrical receptacle near unit.**

Make sure all operators have been instructed on the safe and proper use of the unit.

This unit is not intended for use by children or persons with reduced physical, sensory, or mental capabilities. Ensure proper supervision of children and keep them away from the unit.

This unit has no "user-serviceable" parts. If service is required on this unit, contact an Authorized Ovention Service Agent or contact the Ovention Hotline at 855-298-6836.

⚠ CAUTION

BURN HAZARD:

- **Some exterior surfaces on unit will get hot. Avoid unnecessary contact with unit.**
- **Pan/tray will be very hot upon removal—use oven mitt, pan gripper, or other utensil to remove.**

Do not turn off GFCI switch or unplug unit immediately after use. Internal fans must cool oven to avoid damage to electrical components.

Locate unit at proper counter height in an area that is convenient for use. Location should be level to prevent unit or its contents from falling accidentally and strong enough to support the weight of the unit and contents.

DO NOT lift unit by door handle on front of oven. Door handle is not designed to support weight of unit. Lift from underneath unit only.

Do not move or relocate unit for cleaning. Unit is bulky and heavy.

Do not place anything on top of unit; doing so may subject personnel to injury or could damage unit.

Do not heat sealed containers or products such as whole eggs in oven. These items may explode.

Do not store any materials or items inside oven chamber when not in use.

Never use steel pads, wire brushes, or scrapers to clean unit.

IMPORTANT SAFETY INFORMATION

NOTICE

Improper cleaning of oven could damage catalyst and will void unit warranty.

Wear protective rubber gloves and protective eye wear when cleaning unit.

Do not cover racks or any other part of oven with metal foil. Airflow restriction will cause oven to overheat.

NOTICE

Do not lay unit on its side in any direction. Damage to unit could occur.

Use non-abrasive cleaners and cloths only. Abrasive cleaners and cloths could scratch finish of unit, marring its appearance and making it susceptible to soil accumulation.

Clean unit daily to avoid malfunctions and maintain sanitary operation.

MODEL DESCRIPTION

All Models

Ovention® Single MiLO™ ovens are designed to provide unequaled flexibility in both kitchen and front-of-the-house installations. The variety of menu options, small footprint, low heat escape, and hood-less installation make the Single MiLO™ oven a single solution alternative to multiple pieces of cooking equipment.

The Single MiLO oven chamber has upper and lower infrared (IR) heating elements and a convected air blower. The upper and lower infrared elements provide traditional cooking and food finishing from above and below the food product. The convected air blower directs heated air through the upper and lower IR element packs and throughout the inside of the oven chamber for fast and even cooking. Both types of heat are adjustable in both duration and intensity by developing/using programmed recipes on the touchscreen.

Operator controls for the oven consist of a touchscreen, a GFCI switch, and a Control Reset switch. A USB port allows the uploading of pre-programmed recipes, installation of software updates, and the opportunity for service diagnostics. A 6′ (1829 mm) cord and plug set is standard.

Any oven-safe pan can be used in the oven chamber of the Single MiLO oven. Each chamber has a capacity of a standard 1/4 sheet pan or up to a 14″ pizza.

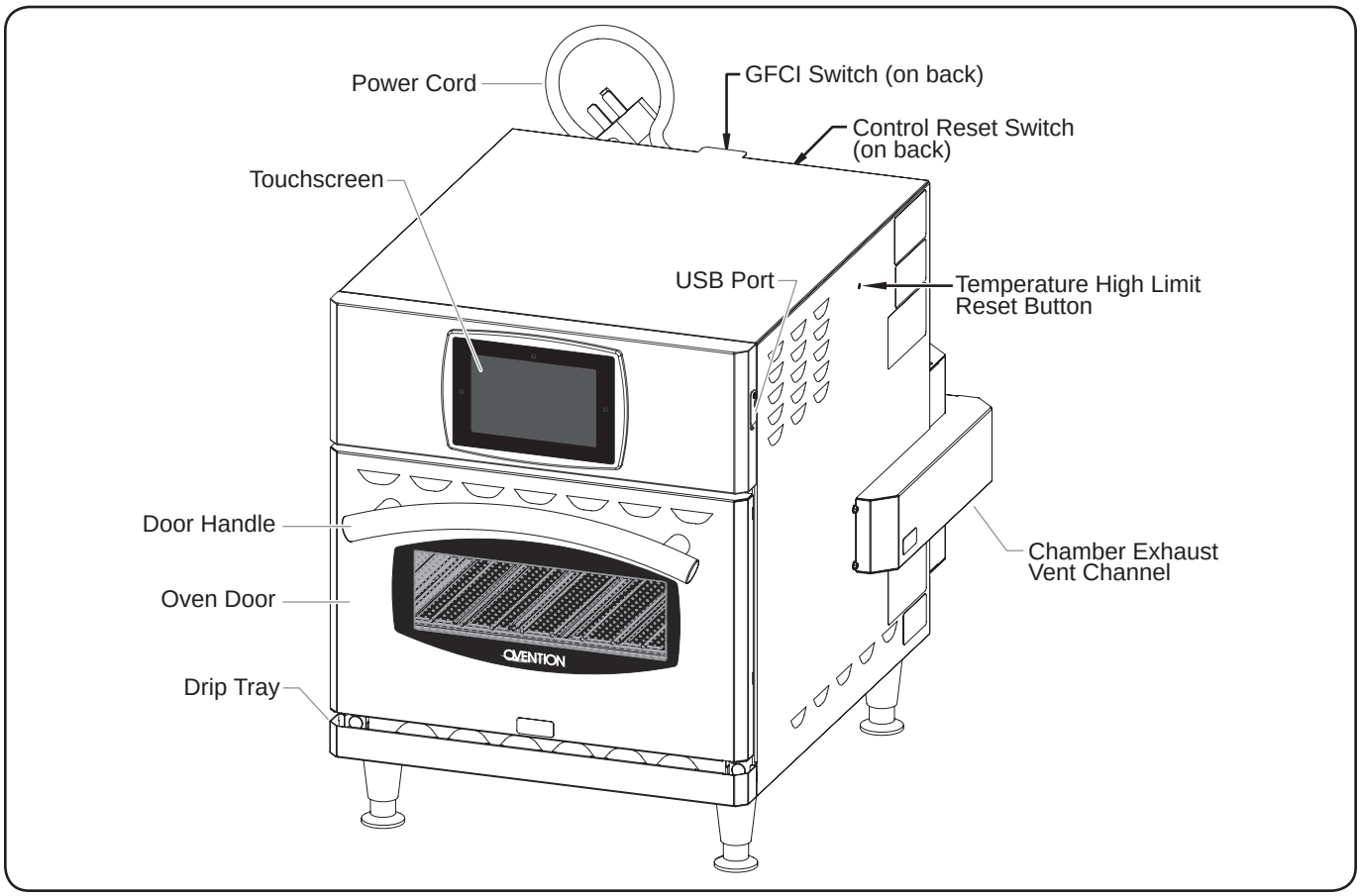

Model Description (Model MiLO-14 shown)

MODEL DESIGNATION

M i L O - x x

Oven Type:
Manual Loading Oven

Maximum Product Width
(in inches)

SPECIFICATIONS

Plug Configurations

Units are equipped with an electrical cord and plug appropriate for the electrical rating of the unit. Unit must be connected to a dedicated circuit.

⚠ WARNING

ELECTRIC SHOCK HAZARD: Plug unit into a properly grounded electrical receptacle of the correct voltage, size, and plug configuration. If plug and receptacle do not match, contact a qualified electrician to determine and install proper voltage and size electrical receptacle.

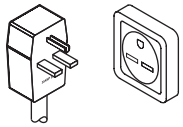

NEMA 6-30P

Plug Configurations

NOTE: Receptacle not supplied by Ovention.

Electrical Rating Chart

Model	Voltage	Watts	Amps	Phase	Hertz	Plug Configuration	Unit Weight
MiLO-14	208–240	5658–7152	27.2–29.8	1	60	NEMA 6-30P	163 lbs. (74 kg)

NOTE: Ovention MiLO ovens are designed to accept 208 VAC through 240 VAC. The oven will adjust automatically to the input voltage.

NOTE: The specification label is located on the right side of the unit. See the label for the serial number and verification of unit electrical information.

Temperature Range

The operating temperature range of the oven is 82°–600°F (28°–316°C).

SPECIFICATIONS

Dimensions

Model	Width (A)	Depth (B)	Height (C)	Footprint Width (D)	Footprint Depth (E)	Door Open Depth (F)
MiLO-14	23-7/16″ (595 mm)	32-3/16″ (817 mm)	25-3/4″ (654 mm)	18-7/8″ (479 mm)	21-3/16″ (537 mm)	41-3/8″ (1051 mm)

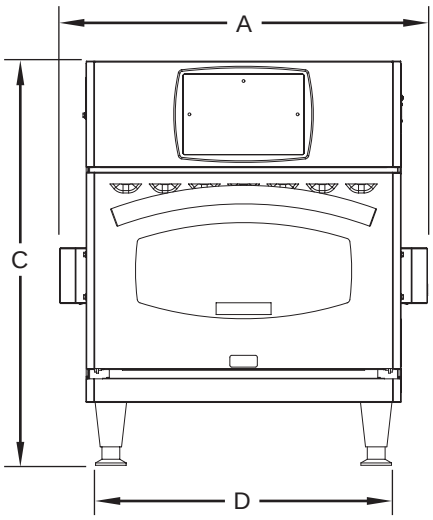

Front View

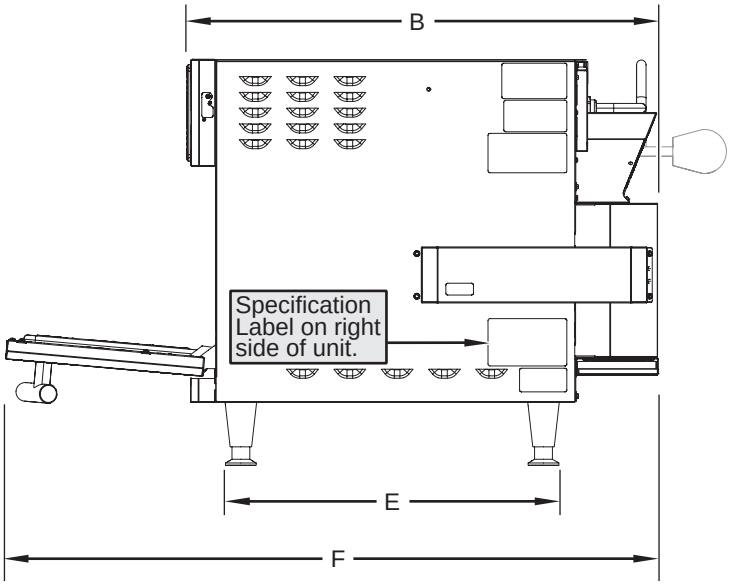

Side View

Oven Cavity Dimensions

Model MiLO-14
15-1/2″ W x 14″ D x 4″ H
(393 x 356 x 102 mm)

General

Ovention® Single MiLO™ ovens are shipped with most components pre-assembled. Care should be taken when unpacking the shipping carton to avoid damage to the unit and components enclosed.

⚠ WARNING

ELECTRIC SHOCK HAZARD: Unit is not weatherproof. Locate unit indoors where ambient air temperature is a minimum of 70°F (21°C).

FIRE HAZARD:

- **Install with a minimum of 1″ (25 mm) of space from rear of unit to any surface. If safe distances are not maintained, discoloration or combustion could occur.**
- **Install on non-combustible surface if used without legs or casters.**
- **Do not block or cover any cabinet venting.**
- **Do not use an extension cord. If power cord is too short, contact a qualified electrician to determine and install proper voltage and size electrical receptacle near unit.**

⚠ CAUTION

Locate unit at proper counter height in an area that is convenient for use. Location should be level to prevent unit or its contents from falling accidentally and strong enough to support the weight of the unit and contents.

NOTICE

Do not lay unit on its side in any direction. Damage to unit could occur.

NOTE: Due to the size and weight of the oven, use the proper number of people for installation based on the weight of the oven.

1. Inspect the shipping container for obvious signs of transit damage. If damaged, inform the freight company immediately. **CAUTION! Stop! Do not attempt to use a damaged oven. Contact Ovention for assistance.**
2. Cut and remove the shipping bands from around the oven packaging.
3. Remove tape and protective packaging from all surfaces of the unit.
4. Remove the two cooking racks from packaging.
5. Inspect the oven for freight damage such as dents in the housing or inside the oven chambers. If damaged, inform the freight company immediately.

⚠ CAUTION

DO NOT lift unit by door handle on front of oven. Door handle is not designed to support weight of unit. Lift from underneath unit only.

6. Place the unit in the desired location. Make sure to lift from underneath the oven only.
   - Locate the unit in an area where the ambient air temperature is constant and a minimum of 70° F (21° C).
   - Make sure the unit is at the proper counter height in an area convenient for use.
   - Make sure the countertop/table is level and strong enough to support the weight of the unit and food product.
   - Position with a minimum of 1″ (25 mm) of space from the rear of the unit to any surface.

NOTE: The above dimensions are minimum spacing requirements. Placing the unit with enough space to allow access to the USB port, GFCI switch, control reset switch, air filters, and high limit reset button on the back of the unit is advisable.

   - Make sure all the feet on the bottom of the unit are positioned securely on the countertop/table.
7. Install the cooking rack into the oven chamber. To install the rack:
   a. Open the oven door.
   b. Slide the cooking rack into the desired position in the oven chamber. The cooking rack can be positioned either directly on the lower IR element pack or on the raised flanges of the lower IR element pack (recommended).

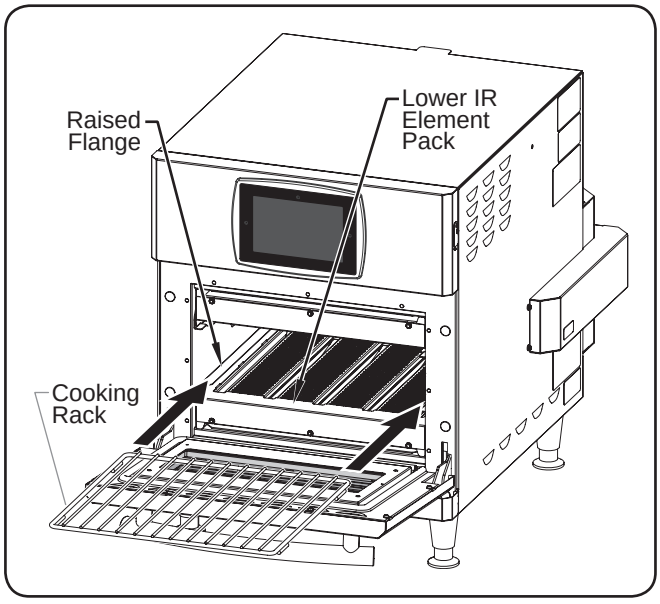

Installing the Cooking Rack

8. Plug the unit into a properly grounded electrical receptacle of the correct voltage, size, and plug configuration. See the SPECIFICATIONS section for details.

NOTE: The oven is suitable for 208 VAC through 240 VAC and will adjust automatically to the voltage being supplied.

OPERATION

General

Use the following information and procedures to operate an Ovention® Single MiLO™ oven.

⚠ WARNING

Read all safety messages in the IMPORTANT SAFETY INFORMATION section before operating this equipment.

In the event of emergency, unplug unit.

⚠ CAUTION

BURN HAZARD:

- **Some exterior surfaces on unit will get hot. Avoid unnecessary contact with unit.**
- **Pan/tray will be very hot upon removal—use oven mitt, pan gripper, or other utensil to remove.**

Recipe Information

Single MiLO ovens are designed to provide unequaled flexibility and efficiency. The touchscreen controller has the capability of storing over 4000 custom recipes. Recipes are organized into categories that group together similar items, such as lunch recipes or different varieties of pizza.

At initial startup, the Categories screen will show an "Uncategorized" category and either a sample category or customer-specific, preloaded categories. If the Categories screen shows a sample category with recipes, these recipes can be used to help develop specific recipes appropriate for the installation. Refer to the "Programming Categories/Recipes" procedure in this section for instructions on creating recipes and categories.

Startup

Use the following procedure to start up the oven.

1. Make sure the unit is plugged into a properly grounded electrical receptacle of the correct voltage, size, and plug configuration. See the SPECIFICATIONS section for details.
2. Make sure the GFCI switch is in the **I** (On) position.
3. Make sure the Control Reset switch is in the "On" position.
   - The touchscreen will energize and show the logo screen followed by a progress circle.
   - After the software loads, the Hello screen will appear.

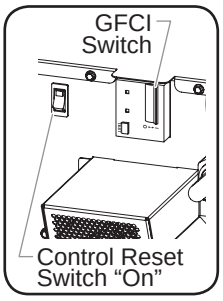

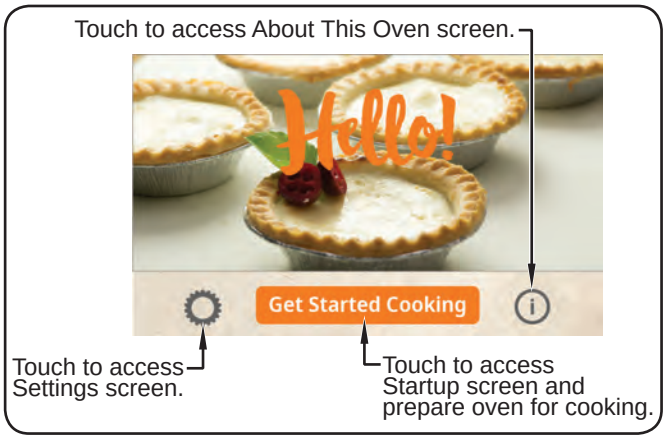

Hello Screen

4. Touch GET STARTED COOKING on the Hello screen to prepare the oven for cooking. The Startup screen will appear.

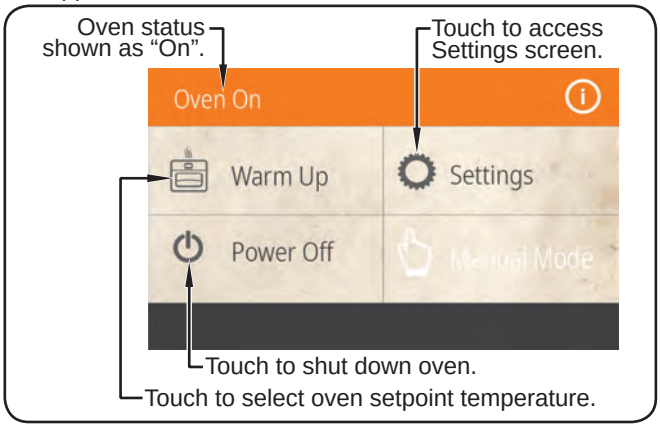

Startup Screen

5. Touch WARM UP on the Startup screen. The Warm Up Temp screen will appear.
   - Several pre-set setpoint temperatures are available.

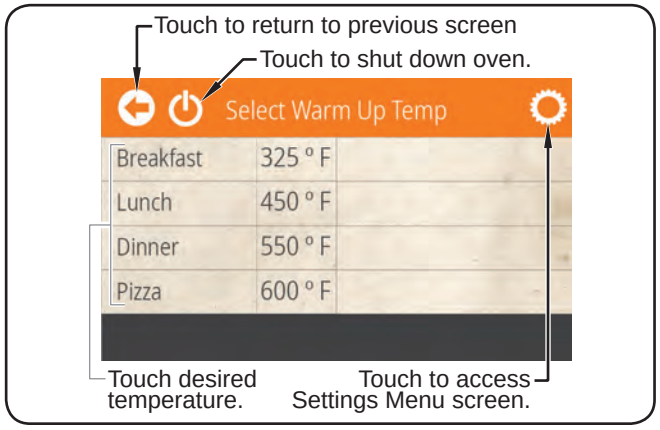

Warm Up Temp Screen

6. Touch the desired setpoint temperature on the touchscreen.
   - The IR elements, air blowers, and cooling fans will start up. Allow 20–30 minutes for the oven to reach setpoint temperature.
   - The touchscreen shows the selected setpoint temperature, the current chamber temperature, and the time remaining for warmup.

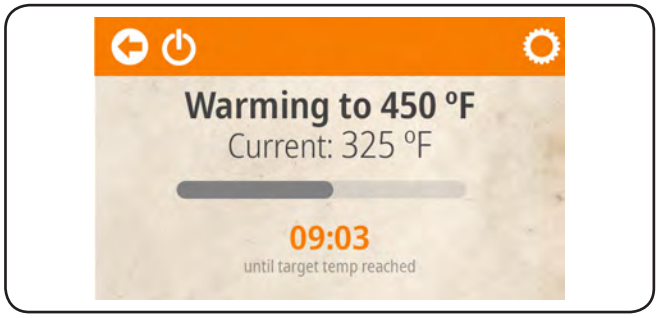

Warmup Status Screen

When the oven reaches setpoint temperature, the Categories screen appears on the touchscreen. The oven is now ready for cooking.

Cooking

Use the following procedures to cook food product in the Single MiLO oven.

NOTE: If the oven door is left open for more than 15 seconds during a cooking sequence, a "Close Door" pop up will appear on the touchscreen.

1. Make sure the oven chamber has reached setpoint temperature. The Categories screen will appear on the touchscreen.

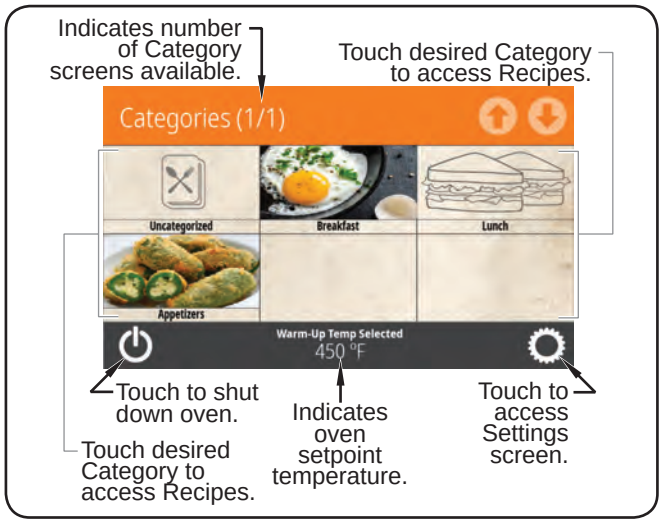

Categories Screen

NOTE: The Categories and Recipes shown are for example only. Depending on the configuration of the oven, these screens will show either sample items or customer-specific, preloaded items.

2. Open the oven door, and place the pan/tray with food product into the oven chamber. **CAUTION! BURN HAZARD—Always use a paddle, pan gripper, or other utensil to load and unload food product.**
3. Touch the desired category on the touchscreen. The Recipes screen will appear.

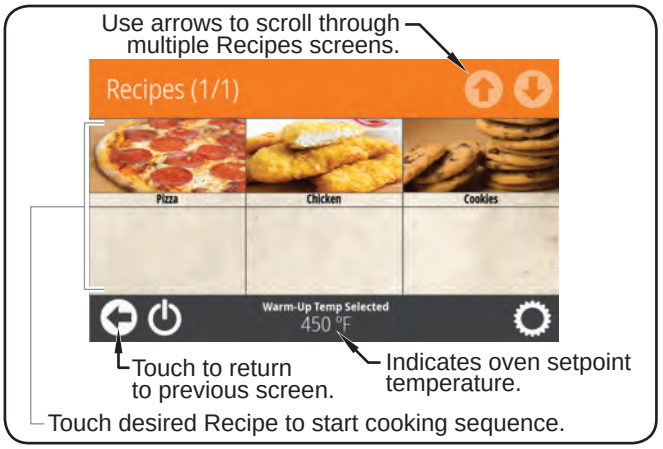

Recipes Screen

4. Touch the desired recipe on the touchscreen.
   - The oven chamber illuminates and the cooking sequence begins.
   - The touchscreen changes to the Cooking screen and shows the remaining cook time for the selected recipe.

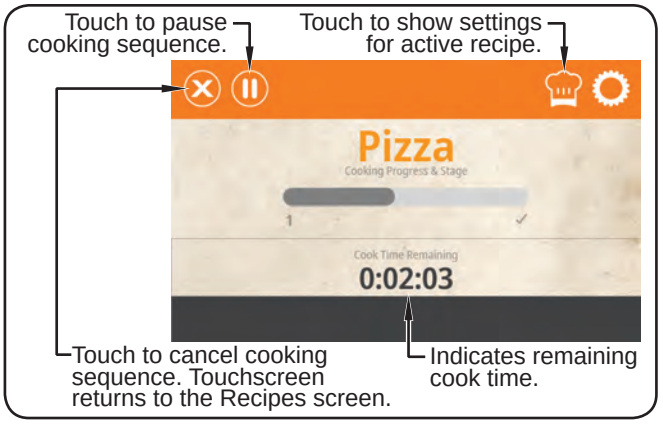

Cooking Screen

   - If the selected recipe contains any Cook Events, the Cooking screen will change to show the name of the recipe cooking as well as a countdown to the Cook Event. When the Cook Event occurs, the cooking sequence pauses and the Cook Event screen will appear on the touchscreen. Open the oven door, remove the pan/tray with food product, complete the action on the food product, place the pan/tray with food product back into the oven chamber, close the oven door, and touch ▶ on the Cook Event screen to continue the cooking sequence. See "Programming a Cook Event" in this section for a detailed description of Cook Events.
   - To pause a cooking sequence, touch ⏸. The touchscreen will show "COOKING PAUSED". Touch ▶ to resume the cooking sequence.
   - When the cooking sequence is finished, the touchscreen shows "[Recipe] DONE" and an audible alert sounds.
5. Open the oven door. Using a paddle, pan gripper, or other utensil, remove the cooked food product and close the oven door. **CAUTION! BURN HAZARD—Always use a paddle, pan gripper, or other utensil to load and unload food product.**
   - The touchscreen will return to the Recipes screen.

NOTE: Touch ✓ on the "DONE" screen to return to the Recipes screen without opening the oven door.

Standby Shutdown

Use the following procedure to put the oven into standby shutdown during extended periods of non-use.

1. Touch ⏻ on the touchscreen to shut down operation and put the oven in standby.
   - The elements will shut off, and the Cooling screen will appear on the touchscreen,
   - The air blowers and cooling fans will continue to operate until the oven chamber temperature drops below 140°F (60°C).
   - After the chamber is cool, the oven status will read “Oven Off”. After a period of time, the touchscreen will darken to a screen saver.

Shutdown

Use the following procedure to disconnect the oven from power for cleaning and maintenance as well as long term shutdown.

1. Touch ⏻ on the touchscreen to shut down operation and put the oven in standby. Cooling fans will operate until the oven chamber temperature drops below 140°F (60°C).

⚠ CAUTION

Do not turn off GFCI switch or unplug unit immediately after use. Internal fans must cool oven to avoid damage to electrical components.

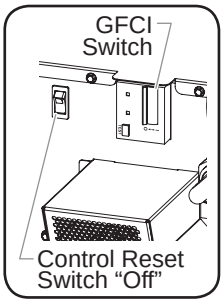

2. After the cooling fans shut off:
   a. Move the GFCI switch on the back of the oven to the **O** (Off) position.
   b. Move the Control Reset switch to the “Off” position.
   c. Unplug the power cord.

Programming Categories/Recipes

Use the following procedures to edit, create, or delete categories and recipes. These procedures require access to password-protected screens and should be performed by authorized personnel only.

NOTE: The USB port allows the uploading of pre-programmed recipes from an external USB drive. Refer to the “Uploading from a USB Drive” procedure in this section for details.

1. From the Categories screen, touch ⚙.
   • A password keypad will appear on the touchscreen.
2. Input the password “12345” , and touch ✓.
   • The Settings screen will appear on the touchscreen.

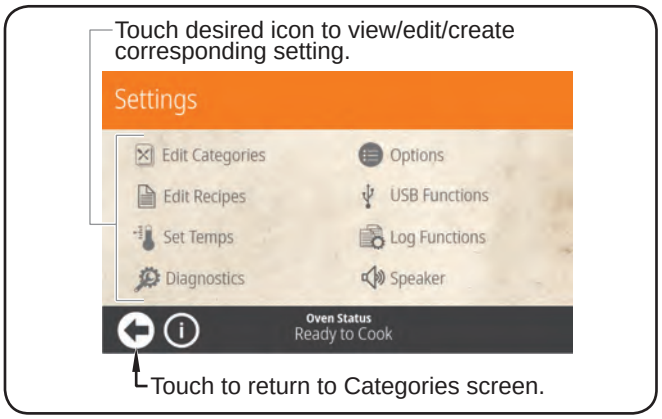

Settings Screen

3. Touch either EDIT CATEGORIES or EDIT RECIPES on the Settings screen, depending on the desired function. Then, refer to the appropriate procedure in this section.

Editing/Creating Categories

After touching EDIT CATEGORIES on the Settings screen, the Edit Categories screen will appear. This screen will look similar to the Categories Screen.

1. Touch an existing category to edit the category, or touch ✚ to create a new category.
   - **For existing categories,** a blue box will highlight the category.
   - **For new categories,** a new category will appear highlighted by a blue box.

Edit Categories Screen

2. Touch ✎ to edit/create the category. The Now Editing Category screen appears.

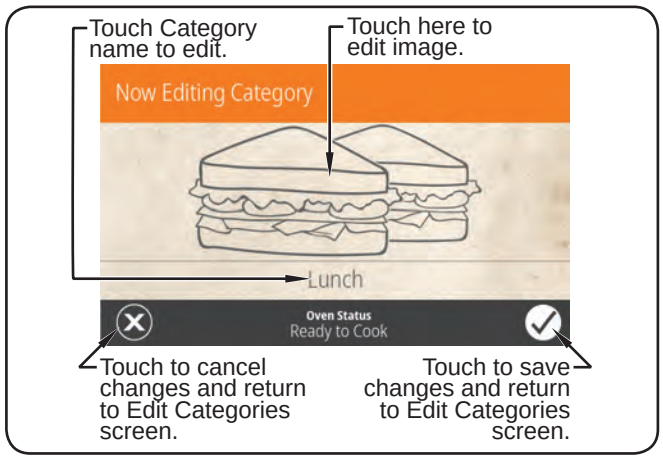

Now Editing Category Screen

3. Touch the category image to select the icon or photo used for the category. The Select Image screen appears and shows two tabs—one for icons and one for photos.
   a. Use the arrows to scroll through the desired tab.
   b. Touch the desired image to select, then touch ✓ to save and return to the Now Editing screen.
4. Touch the category name to edit.
   a. Use the keypad that appears to edit the name. Names can have up to 20 characters.
   b. Touch ✓ to save and return to the Now Editing screen.
5. When category editing is complete, touch ← twice to return to the Categories screen.

NOTE: Recipes related to a category can be edited/created from the Edit Categories screen. With the category highlighted, touch the ✎ icon to access the Edit Recipes screen. Refer to "Editing/Creating Recipes" in this section for details.

Editing/Creating Recipes

After touching EDIT RECIPES on the Settings screen, the Edit Recipes screen will appear. This screen will look similar to the Recipes Screen.

1. Touch an existing recipe to edit the recipe, or touch ✚ to create a new recipe.
   - **For existing recipes,** a blue box will highlight the recipe.
   - **For new recipes,** a new recipe will appear highlighted by a blue box.

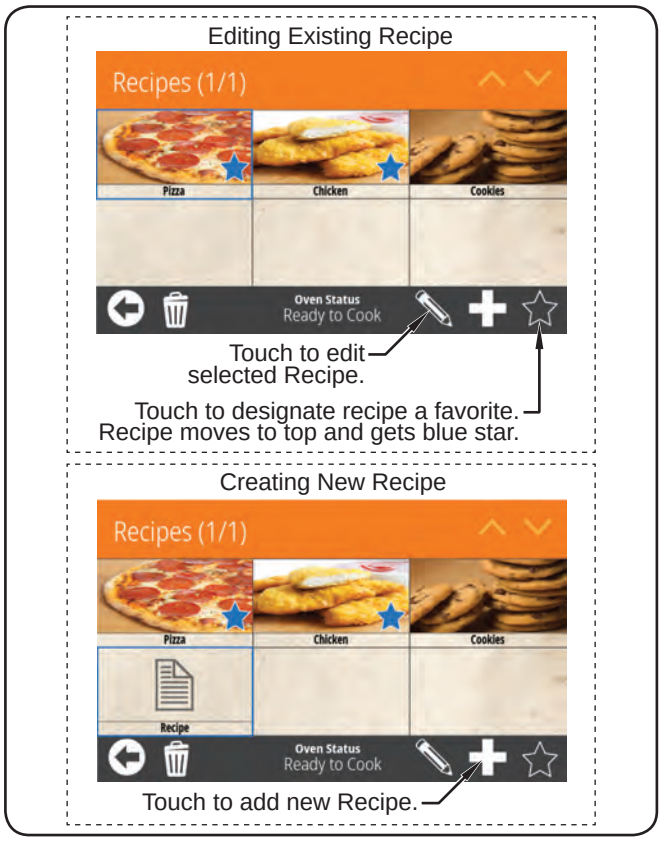

Edit Recipes Screen

2. Touch ✎ to edit/create the recipe. The Now Editing screen appears.

continued...

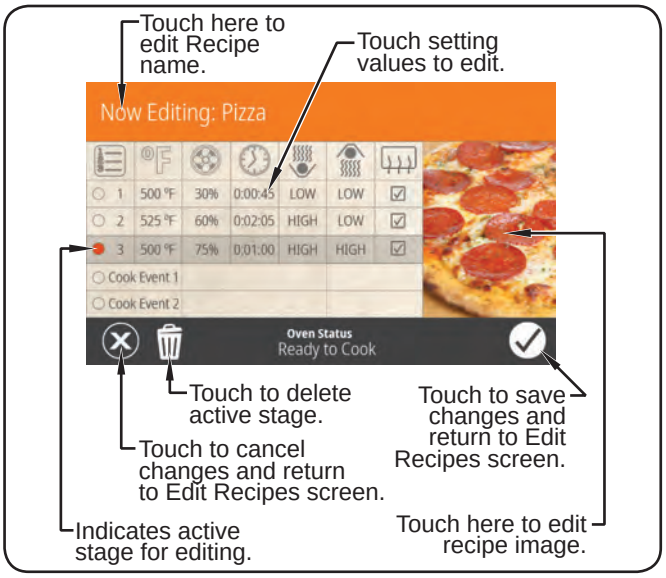

Now Editing Screen

3. Touch the recipe name to edit.
   a. Use the keypad that appears to edit the name. Names can have up to 20 characters.
   b. Touch ✓ to save and return to the Now Editing screen.
4. Touch the recipe image to select the icon or photo used for the recipe. The Select Image screen appears and shows two tabs—one for icons and one for photos.
   a. Use the arrows to scroll through the desired tab.
   b. Touch the desired image to select, then touch ✓ to save and return to the Now Editing screen.
5. Touch each setting on the Now Editing screen to edit the corresponding setting. The Settings include:
   = Stage
   = Cook Temperature
   = Blower Percentage
   = Cook Duration
   = Infrared (IR) Bottom Intensity
   = Infrared (IR) Top Intensity
   = Active Venting
   - Touching number 1, 2, or 3 under the icon will make that stage active for editing. The radio button will glow and the entire row will be highlighted. Each recipe can be programmed to have up to three stages, depending on the food product. Stages are programmed with unique settings to create a customized cooking sequence for the recipe.

NOTE: It is not necessary to create stages for a recipe if it is not required by the food product. If unique stages are not required, leave settings for stages 2 and 3 blank.

   - Touching the setting value for °F, , or will bring up a keypad specific to the setting. Enter the desired value using the keypad, then touch ✓ to return to the Now Editing screen.
   - Touching the setting value for or will toggle the setting between OFF, LOW, MED, and HIGH.
   - Touching the box in the column will either "check" or "uncheck" the box.
     - An unchecked box indicates active venting is enabled. The oven chamber exhaust vents will open and close automatically based on chamber temperature.
     - A checked box disables active venting and indicates the vents are open for that stage.
6. Touch ✓ to save the recipe settings and return to the Edit Recipes screen.
7. When all recipe editing is complete, touch ← twice to return to the Categories screen.

Deleting Categories/Recipes

The procedure for deleting categories and recipes is the same. After touching EDIT CATEGORIES or EDIT RECIPES on the Settings screen, the corresponding "Editing" screen will appear.

1. Touch a category/recipe to select. A blue box will highlight the category/recipe.
2. Touch to delete the category/recipe.
3. When deleting is complete, touch ← twice to return to the Categories screen.

Programming a Cook Event

A Cook Event is a feature that can be programmed into recipes that allows an action to be taken on a food product during a cooking sequence (example: ADD CHEESE). A Cook Event pauses an in-progress cooking sequence and signals the operator to open the oven door and move the food product out of the oven chamber. After the action is taken on the food product, the operator puts the product back into the oven chamber, closes the oven door, and touches ▶ on the Cook Event screen. The cooking sequence resumes. Up to two Cook Events can be programmed into a recipe. Use the following procedure to program a Cook Event.

1. Follow the procedure for creating or editing a recipe described earlier in this section.
2. After programming the settings for the desired number of stages on the Now Editing screen, touch the Cook Event 1 row, to make that cook event active for editing. The radio button will glow and the entire row will be highlighted.
3. Touch "Cook Event 1" in the center box of the active cook event row to name the cook event.
   a. Use the keypad that appears to edit the name. Names can have up to 20 characters.
   b. Touch ✓ to save and return to the Now Editing screen.
4. Touch setting value in the right-side box of the active cook event row. This value sets the time into the cooking sequence when the cook event should occur.
   a. Use the keypad that appears to enter the value.
   b. Touch ✓ to save and return to the Now Editing screen.
5. If a second Cook Event is required, touch the Cook Event 2 row to make that cook event active for editing. Repeat steps 3 and 4.
6. Touch ✓ to save the recipe settings and return to the Edit Recipes screen.

Editing/Creating Setpoint Temperatures

Use the following procedure to edit or create the setpoint temperature(s) available at oven startup. This procedure requires access to password-protected screens and should be performed by authorized personnel only.

1. From the Categories screen, touch ⚙.
   - A password keypad will appear on the touchscreen.
2. Input the password “12345” , and touch ✓.
   - The Settings screen will appear on the touchscreen.

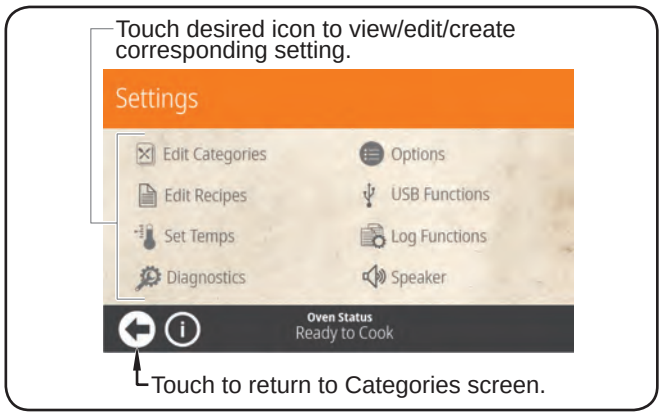

Settings Screen

3. Touch SET TEMPS on the Settings screen. The Set Temps screen appears.
   - The oven can store up to eight setpoint temperatures.

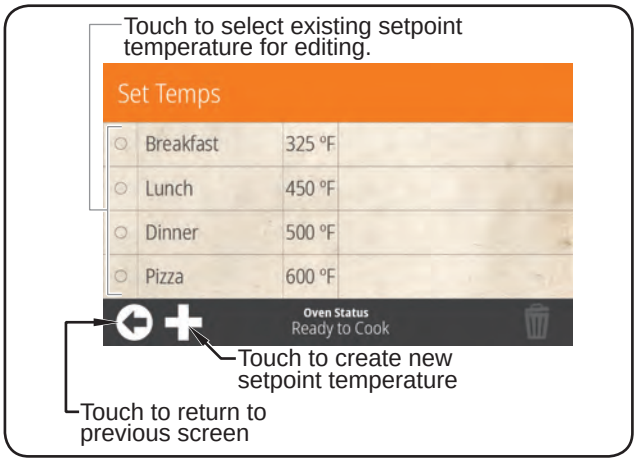

Set Temps Screen

4. Edit/create the desired setpoint temperature.

   To edit an existing setpoint:

   a. Touch the desired setpoint to edit. The setpoint will be highlighted.

   b. Touch the name to edit the setpoint name using the keypad that appears, then touch ✓. The Set Temps screen reappears.

   c. Touch the temperature to edit the setpoint temperature using the keypad that appears, then touch ✓. The Set Temps screen reappears.

   To create a new setpoint:

   a. Touch the ✚ icon. A new temperature setpoint named “Temp” will appear and remain highlighted.

   b. Touch the name to edit the setpoint name using the keypad that appears, then touch ✓. The Set Temps screen reappears.

   c. Touch the temperature to edit the setpoint temperature using the keypad that appears, then touch ✓. The Set Temps screen reappears.

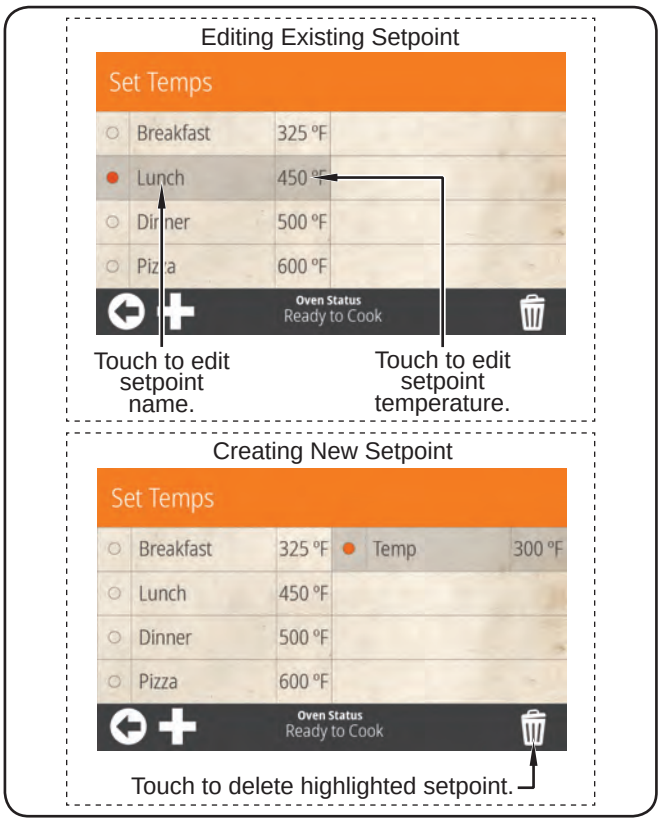

Edit Setpoint Screen

5. Repeat step 4 to edit/create additional setpoint temperatures.
6. When setpoint temperature changes are complete, touch ← twice to return to the Categories screen.

Changing Temperature Unit of Measure

Use the following procedure to change the temperature unit of measure between Fahrenheit and Celsius. This procedure requires access to password-protected screens and should be performed by authorized personnel only.

1. From the Categories screen, touch ⚙.
   - A password keypad will appear on the touchscreen.
2. Input the password “12345” , and touch ✓.
   - The Settings screen will appear on the touchscreen.

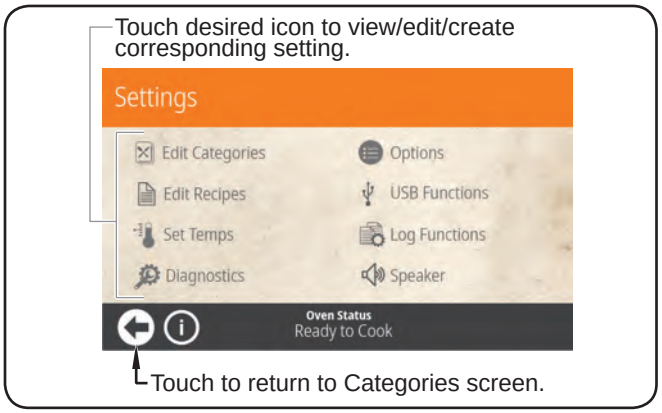

Settings Screen

3. Touch OPTIONS on the Settings screen. The Options screen appears.
4. Touch and drag the slider below the “ºF” and “ºC” on the Options screen to toggle the unit of measure between Fahrenheit and Celsius.

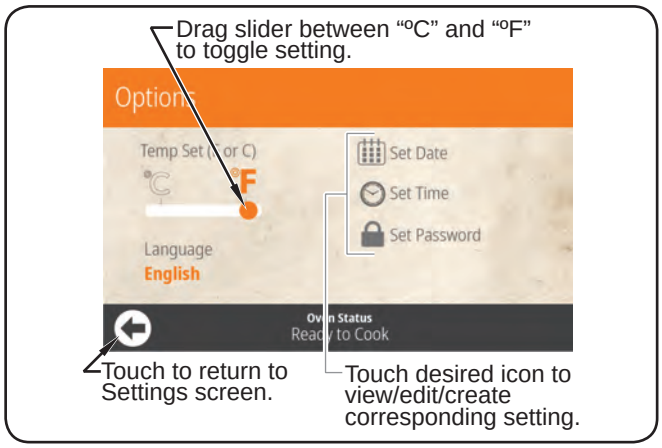

Options Screen

5. When finished changing the unit of measure, touch ← twice to return to the Categories screen.

Importing from a USB Drive

Use the following procedure to import pre-programmed recipes or firmware updates from an external USB drive. This procedure requires access to password-protected screens and should be performed by authorized personnel only.

NOTE: USB drive must have a capacity of 64 GB or less.

1. Slide the cover away from the USB port next to the touchscreen, and insert the USB drive into the port.
2. From any screen, touch ⚙.
   - A password keypad will appear on the touchscreen.
3. Input the password “12345” , and touch ✓.
   - The Settings screen will appear on the touchscreen.
4. Touch USB FUNCTIONS on the Settings screen. The USB Functions screen appears.

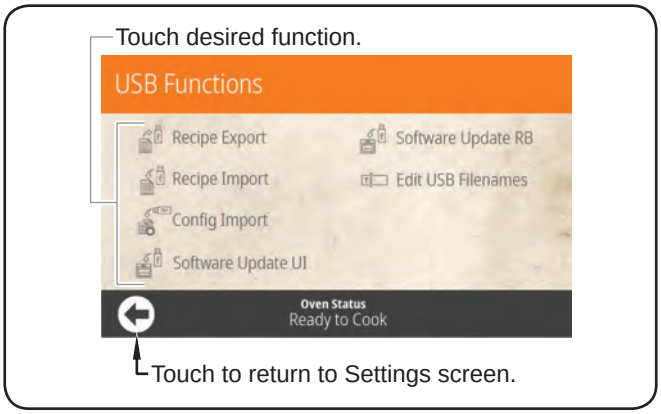

USB Functions Screen

IMPORTANT NOTE:

For the following USB functions, the oven must be cool and in an idle state: CONFIG IMPORT, SOFTWARE UPDATE UI, and SOFTWARE UPDATE RB.

5. Touch the desired function to begin the corresponding import.
   - Select the import file from the list that appears.
   - A screen will appear to indicate that the import is in progress.
6. When the import is complete:
   - For USB functions RECIPE EXPORT, RECIPE IMPORT, and CONFIG IMPORT—The touch screen will return to the USB Functions screen. Remove the USB drive from the USB port, and slide the USB cover over the port.
   - For USB functions SOFTWARE UPDATE UI and SOFTWARE UPDATE RB—The oven will restart. Do not remove the USB drive from the USB port until the touchscreen reads “Remove the USB.” Slide the USB cover over the port.

General

Ovention® Single MiLO™ ovens are designed for maximum durability and performance with minimum maintenance.

⚠ WARNING

ELECTRIC SHOCK HAZARD:

- **Place unit in standby, allow unit to cool, turn off GFCI switch, turn off Control Reset switch, and unplug unit before performing any cleaning, adjustments, or maintenance.**
- **DO NOT submerge or saturate with water. Unit is not waterproof. Do not operate if unit has been submerged or saturated with water.**
- **Do not steam clean or use excessive water on unit.**
- **This unit is snot "jet-proof" construction. Do not use jet-clean spray to clean this unit.**
- **Do not clean unit when it is energized or hot.**
- **Do not clean unit with metal scouring pads. Metal pieces can break off pad and touch electrical components, creating risk of electric shock.**
- **This unit must be serviced by qualified personnel only. Service by unqualified personnel may lead to electric shock or burn.**
- **Use only Genuine Ovention Replacement Parts when service is required. Failure to use Genuine Ovention Replacement Parts will void all warranties and may subject operators of the equipment to hazardous electrical voltage, resulting in electrical shock or burn. Genuine Ovention Replacement Parts are specified to operate safely in the environments in which they are used. Some after-market or generic replacement parts do not have the characteristics that will allow them to operate safely in Ovention equipment.**

This unit has no "user-serviceable" parts. If service is required on this unit, contact an Authorized Ovention Service Agent or contact the Ovention Hotline at 855-298-6836.

⚠ CAUTION

Do not move or relocate unit for cleaning. Unit is bulky and heavy.

Never use steel pads, wire brushes, or scrapers to clean unit.

Wear protective rubber gloves and protective eye wear when cleaning unit.

Improper cleaning of oven could damage catalyst and will void unit warranty.

IMPORTANT NOTE:
Use of cleaning chemicals not approved by Ovention when cleaning the oven chamber will void the warranty.

Daily Cleaning

To maintain performance and preserve the finish of the Ovention Single MiLO oven, clean the unit daily.

⚠ CAUTION

Do not turn off GFCI switch or unplug unit immediately after use. Internal fans must cool oven to avoid damage to electrical components.

NOTICE

Use non-abrasive cleaners and cloths only. Abrasive cleaners and cloths could scratch finish of unit, marring its appearance and making it susceptible to soil accumulation.

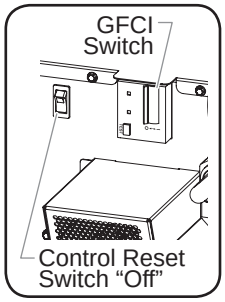

1. Touch ⏻ on the touchscreen to shut down and allow oven to cool. Cooling fans will operate until the oven chamber temperature drops below 140°F (60°C).
2. After the cooling fans shut off:
   a. Move the GFCI switch on the back of the oven to the **O** (Off) position.
   b. Move the Control Reset Switch to the "Off" position.
   c. Unplug the power cord.
3. Remove and discard any remaining food product.
4. Remove and clean the cooking rack using a damp non-abrasive cloth or nylon scouring pad (a non-abrasive cleaner may be used for difficult stains).
5. Remove any spillages using damp paper towel or a non-abrasive cloth.
6. Wipe down all exterior surfaces using a non-abrasive, damp cloth (a non-abrasive cleaner may be used for difficult stains).
7. Wipe dry all surfaces using a non-abrasive, dry cloth.
8. Polish the exterior surfaces of the oven using a good quality stainless steel cleaner.
9. Reinstall the cooking rack (See INSTALLATION section for details.

Weekly Cleaning

1. Touch ⏻ on the touchscreen to shut down and allow oven to cool. Cooling fans will operate until the oven chamber temperature drops below 140°F (60°C).
2. After the cooling fans shut off:
   a. Move the GFCI switch on the back of the oven to the **O** (Off) position.
   b. Move the Control Reset Switch to the "Off" position.
   c. Unplug the power cord.
3. Remove and discard any remaining food product.
4. Remove and clean the cooking rack using a damp non-abrasive cloth or nylon scouring pad (a non-abrasive cleaner may be used for difficult stains).
5. Remove any spillages using damp paper towel or a non-abrasive cloth.

IMPORTANT NOTE:
Use of cleaning chemicals not approved by Ovention® when cleaning the oven chamber will void the warranty.

6. Carefully spray Chemco Dirt Buster III Oven Cleaner onto a non–abrasive nylon scouring pad.

NOTE: Do not spray cleaner directly into the oven chamber or into the fan opening at the rear inside of the oven chamber.

continued...

7. Using the non–abrasive nylon scouring pad, clean the interior surfaces and the inside of the oven door of the oven chamber. Clean any other visible area affected by the grease from cooking as well.
   - Reapply Chemco Dirt Buster III Oven Cleaner onto the nylon scouring pad as needed.
8. Remove and clean the drip tray. To clean the drip tray:
   a. Lift up the drip tray, then angle the tray out to release the tabs on each side of the tray from the slots located directly below each side of the oven door.
   b. Spray Chemco Dirt Buster III Oven Cleaner onto both sides of the drip tray. Allow the cleaner to sit for 3–5 minutes.
   c. Using a non–abrasive nylon scouring pad, apply pressure to wipe away grease residue.
   d. Wipe the drip tray clean using a damp, non-abrasive cloth and allow to air dry.
9. Wipe all surfaces clean using a damp, non-abrasive cloth.
10. Wipe dry all surfaces using a non-abrasive, dry cloth.
11. Reinstall the drip tray. To install the drip tray:
    a. Angle the rear support on the drip tray up behind the oven door.
    b. Align the tabs at each end of the drip tray with the slots directly below each side of the oven door.
    c. Lower the tabs on the drip tray into the slots on the oven.
12. Reinstall the cooking rack (See INSTALLATION section for details.
13. Polish the exterior surfaces of the oven using a good quality stainless steel cleaner.

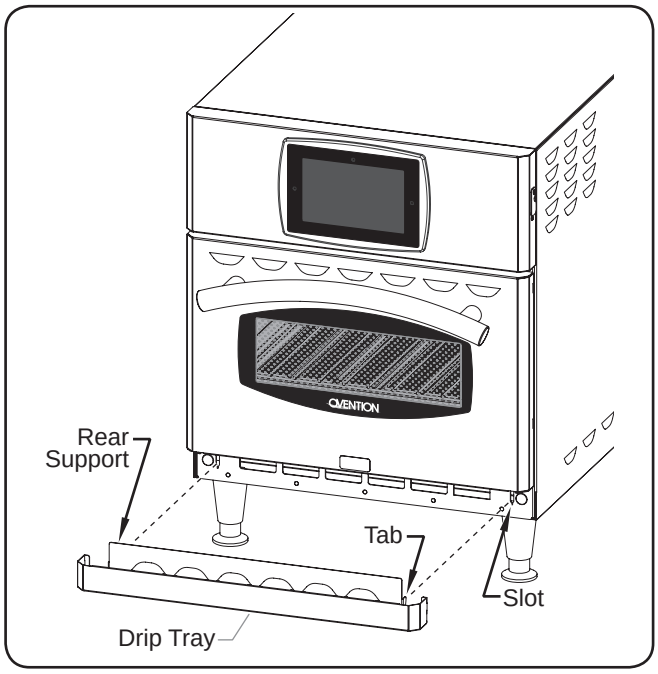

Cleaning the Drip Tray

Monthly Cleaning

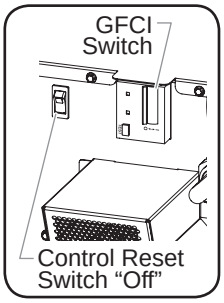

1. Touch ⏻ on each touchscreen to shut down and allow oven to cool. Cooling fans will operate until the oven chamber temperature drops below 140°F (60°C).
2. After the cooling fans shut off:
   a. Move both GFCI switches on the back of the oven to the **O** (Off) position.
   b. Move both Control Reset Switches to the "Off" position.
   c. Unplug the power cord.
3. Remove and clean the two small air filters and the single large air filter on the back of the oven. To remove and clean each filter:
   a. Slide the filter straight out of the filter bracket.
   b. Spray the filter with water and/or soak in soap and water.
   c. Rinse clean and allow the filter to air dry.
   d. When the filter is dry, reinstall the filter into the filter bracket.

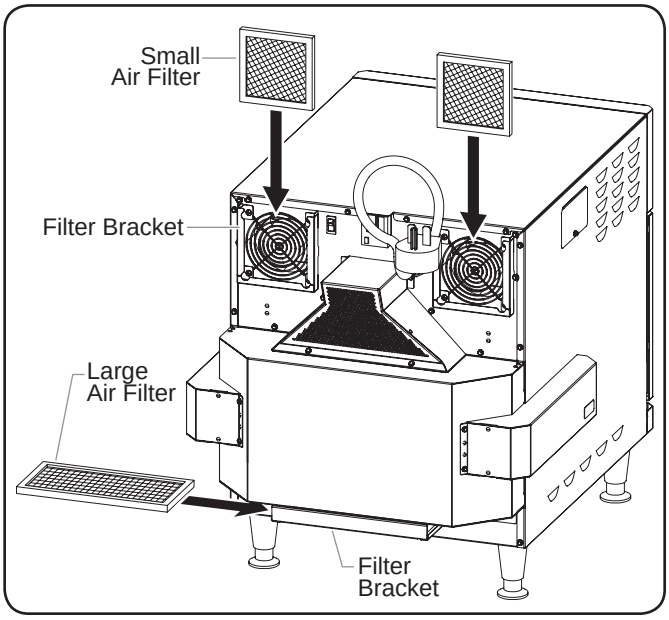

Cleaning the Air Filters

4. Remove each cooking rack.

IMPORTANT NOTE:

Use of cleaning chemicals not approved by Ovention when cleaning the oven chamber will void the warranty.

5. Remove and clean the upper and lower crumb trays in the oven chamber. To clean the crumb trays:

   a. Open the oven door.

   b. Remove the lower crumb tray:

   - Lift up the front of the lower IR element pack, and hold in the raised position.

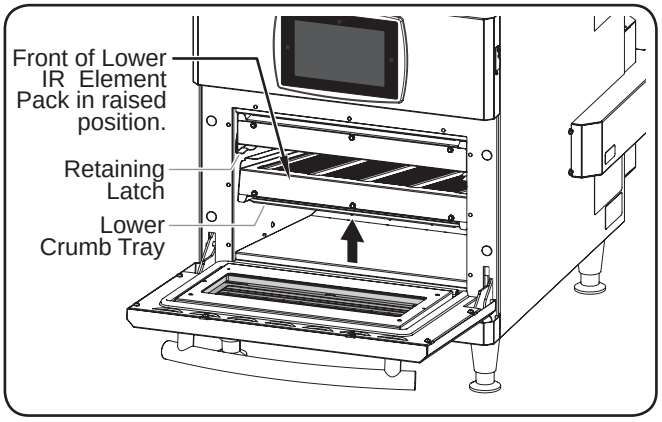

Removing a Lower Crumb Tray

   - Remove the crumb tray by pulling it down and out of the lower IR element pack.
   - Pull the crumb tray out of the oven chamber.

   c. Remove the upper crumb tray:

   - Rotate out the two retaining latches that hold the upper IR element pack in position.
   - Lower the front of the upper IR element pack.

NOTE: The upper and lower IR element packs are hinged on the back side.

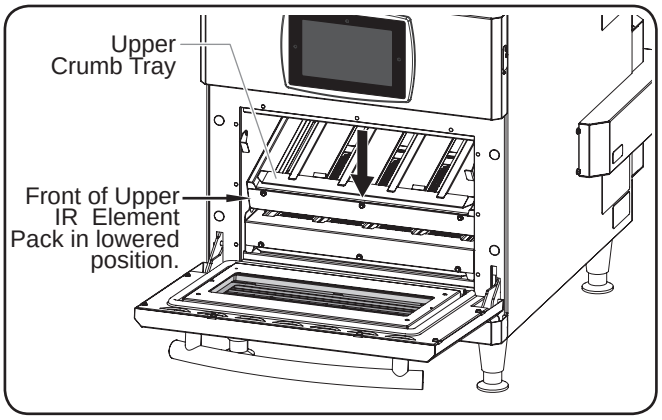

Removing an Upper Crumb Tray

   - Remove the crumb tray by lifting it up and out of the upper IR element pack.
   - Pull the crumb tray out of the oven chamber.

   d. Spray Chemco Dirt Buster III Oven Cleaner onto both sides of each crumb tray. Allow the cleaner to sit for 3–5 minutes.

   e. Using a non–abrasive nylon scouring pad, apply pressure to wipe away grease residue.

   f. Wipe the crumb trays clean using a damp, non-abrasive cloth and allow to air dry.

6. Reinstall the upper and lower crumb trays into the oven chamber. To install the crumb trays:

   a. Open the oven door.

   b. Install the upper crumb tray:

   - Align the air channels on the crumb tray with the gaps on the upper IR element pack.
   - Push the back edge of the crumb tray into the slot along the back side of the oven chamber, above the IR element pack.
   - Raise the upper IR element pack while guiding the crumb tray into the element pack.
   - Rotate the retaining latches into position underneath the upper IR element pack to secure the element pack in position.

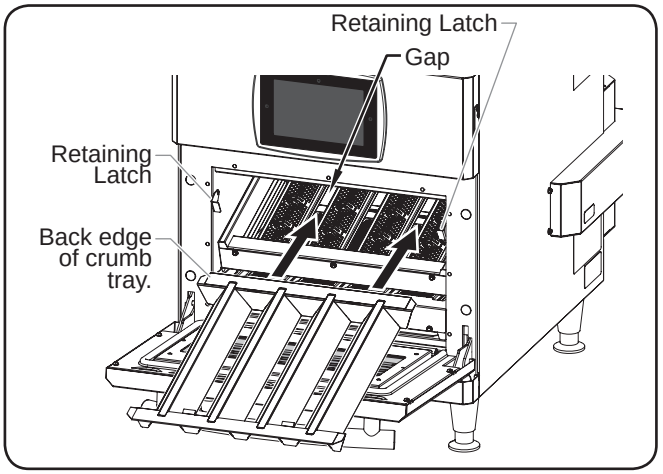

Replacing an Upper Crumb Tray

   c. Install the lower crumb tray:

   - While holding up the lower IR element pack, align the air channels on the crumb tray with the gaps on the IR element pack.
   - While holding the crumb tray flat horizontally, push the back edge of the tray into the slot along the back side of the oven chamber, below the IR element pack.
   - Lower the upper IR element pack while guiding the crumb tray into the element pack.

NOTE: The lower crumb tray will rest flat on the oven chamber floor when installed correctly. Remove and reinstall if the tray appears angled down toward the rear of the chamber.

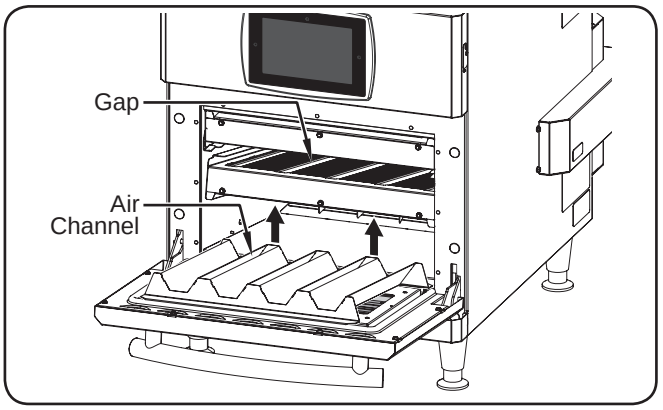

Replacing a Lower Crumb Tray

7. Perform the “Weekly Cleaning” procedure in this section.

TROUBLESHOOTING GUIDE

⚠ WARNING

This unit must be serviced by qualified personnel only. Service by unqualified personnel may lead to electric shock or burn.

⚠ WARNING

ELECTRIC SHOCK HAZARD: Place unit in standby, allow unit to cool, turn off GFCI switch, turn off Control Reset switch, and unplug unit before performing any cleaning, adjustments, or maintenance.

Symptom	Probable Cause	Corrective Action
Oven does not operate (blank touchscreen).	Unit unplugged.	Make sure unit is plugged in.
	Control Reset switch in Off position.	Move Control Reset switch to the On position. 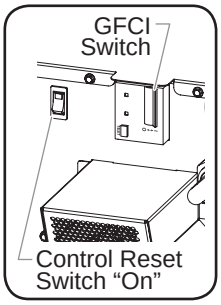
	GFCI switch in the **O** (Off) position.	Move GFCI switch to the **I** (On) position.
	GFCI tripped.	Reset GFCI by moving GFCI switch to the **O** (off) position and back to the **I** (On) position. If GFCI continues to trip, contact Authorized Service Agent or Ovention Hotline for assistance.
	Unit connected to incorrect power supply.	Refer to SPECIFICATIONS section for unit electrical specifications. Contact a qualified electrician to determine and install proper voltage and size electrical receptacle.
Improper cooking of food.	Incorrect setpoint temperature or recipe selection.	Verify desired setpoint temperature and recipe selection. Change to proper settings, if necessary (refer to OPERATION section).
	GFCI switch in the **O** (Off) position.	Move GFCI switch to the **I** (On) position.
	Crumb tray(s) installed incorrectly or missing.	Reinstall crumb tray(s). Refer to MAINTENANCE section for installation procedure.
	IR Element pack or air flow malfunction.	Contact Authorized Service Agent or Ovention Hotline for assistance.
Oven not heating.	GFCI switch in the **O** (Off) position.	Move GFCI switch to the **I** (On) position.
	Temperature High Limit switch has tripped.	Using a pen, screwdriver, or other similar device, press the Temperature High Limit Reset Button located on the right side of the oven near the top. If switch continues to trip, contact Authorized Service Agent or Ovention Hotline for assistance. 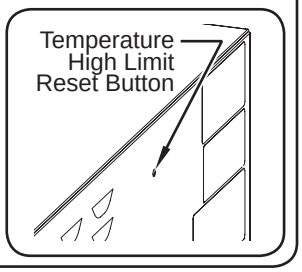

NOTE: To locate an Authorized Ovention® Service Agent, access the Ovention website at **www.oventionovens.com** *and select the Service & Support tab, or call the Ovention Hotline at 855-298-OVEN(6836).*

Trays, Racks, and Other Utensils

Several types of pans, screens, and utensils are available for the Single MiLO oven.

OVNTN-PS12..... Round Pizza Screen, 12” (305 mm)

M1313-PG ..... Round Panini Grill Pan

OVNTN-PDL..... Metal Paddle

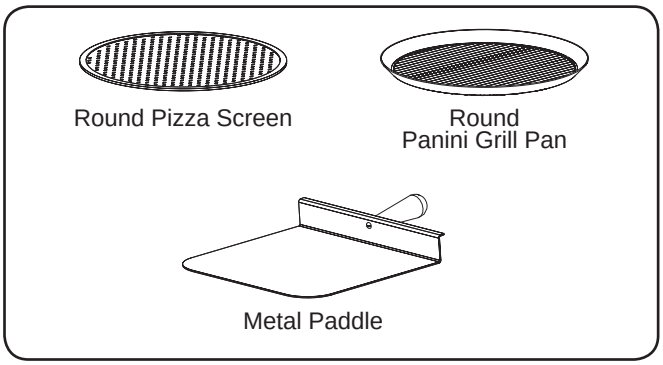

Miscellaneous

OV-FIL-360..... Replacement Air Filter, Small

OVNTN-FIL ..... Replacement Air Filter, Large

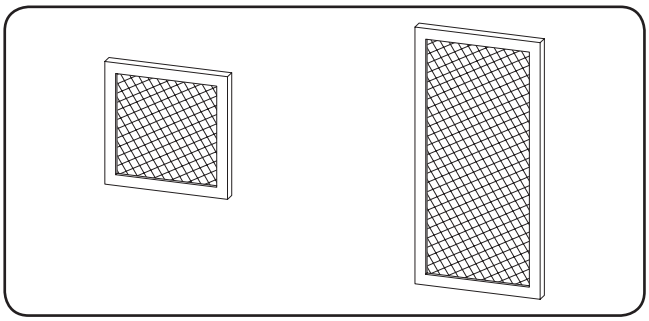

OVNTN-CLNR.... Oven Cleaner, case of six bottles

NOTE: Use Oven Cleaner to clean cooking grease and residue safely from the crumb trays and oven chamber.\

IMPORTANT NOTE

Additional accessories are available for Ovention Ovens. Contact the Ovention Hotline at 855-298-OVEN(6836) for information.

LIMITED WARRANTY

1. PRODUCT WARRANTY

Ovention®, Inc. (“Ovention”) warrants the products that it manufactures (the “Products”) to be free from defects in materials and workmanship, under normal use and service, for a period of one (1) year from the date of purchase when installed and maintained in accordance with Ovention’s written instructions or 18 months from the date of shipment from Ovention. Buyer must establish the product’s purchase date with Ovention sales representative or by other means satisfactory to Ovention in its sole discretion.

Ovention warrants the following Product components to be free from defects in materials and workmanship from the date of purchase (subject to the foregoing conditions) for the period(s) of time and on the conditions listed below:

- **Ninety (90) Day Parts-Only Warranty:**
  Replacement Parts

THE FOREGOING WARRANTIES ARE EXCLUSIVE AND IN LIEU OF ANY OTHER WARRANTY, EXPRESSED OR IMPLIED, INCLUDING BUT NOT LIMITED TO ANY IMPLIED WARRANTY OF MERCHANTABILITY OR FITNESS FOR A PARTICULAR PURPOSE OR PATENT OR OTHER INTELLECTUAL PROPERTY RIGHT INFRINGEMENT. Without limiting the generality of the foregoing, SUCH WARRANTIES DO NOT COVER: Damage to touchscreens from abuse or impact; Wear items such as air filters and conveyor belts; Damage to catalyst from use of non-approved cleaning products; Product misuse, tampering or misapplication; improper installation; lack of or improper cleaning; or application of improper voltage.

2. LIMITATION OF REMEDIES AND DAMAGES

Ovention’s liability and Buyer’s exclusive remedy hereunder will be limited solely, at Ovention’s option, to repair or replacement by an Ovention-authorized service agency (other than where Buyer is located outside of the United States, Canada, United Kingdom or Australia, in which case Ovention’s liability and Buyer’s exclusive remedy hereunder will be limited solely to replacement of part under warranty) with respect to any claim made within the applicable warranty period referred to above. Ovention reserves the right to accept or reject any such claim in whole or part. Ovention will not accept the return of any Product without prior written approval from Ovention, and all approved returns shall be made at Buyer’s sole expense. OVENTION WILL NOT BE LIABLE, UNDER ANY CIRCUMSTANCES, FOR CONSEQUENTIAL OR INCIDENTAL DAMAGES, INCLUDING BUT NOT LIMITED TO LABOR COSTS OR LOST PROFITS RESULTING FROM THE USE OF OR INABILITY TO USE THE PRODUCTS OR FROM THE PRODUCTS BEING INCORPORATED IN OR BECOMING A COMPONENT OF ANY OTHER PRODUCT OR GOODS.

Ovention, Inc.
P.O. Box 340500
Milwaukee, WI 53234-0500 U.S.A.
855-298-OVEN(6836)
connect@oventionovens.com
partsandservice@oventionovens.com
www.oventionovens.com